What should you do in an EMERGENCY?

Connect the dots to see the picture below.

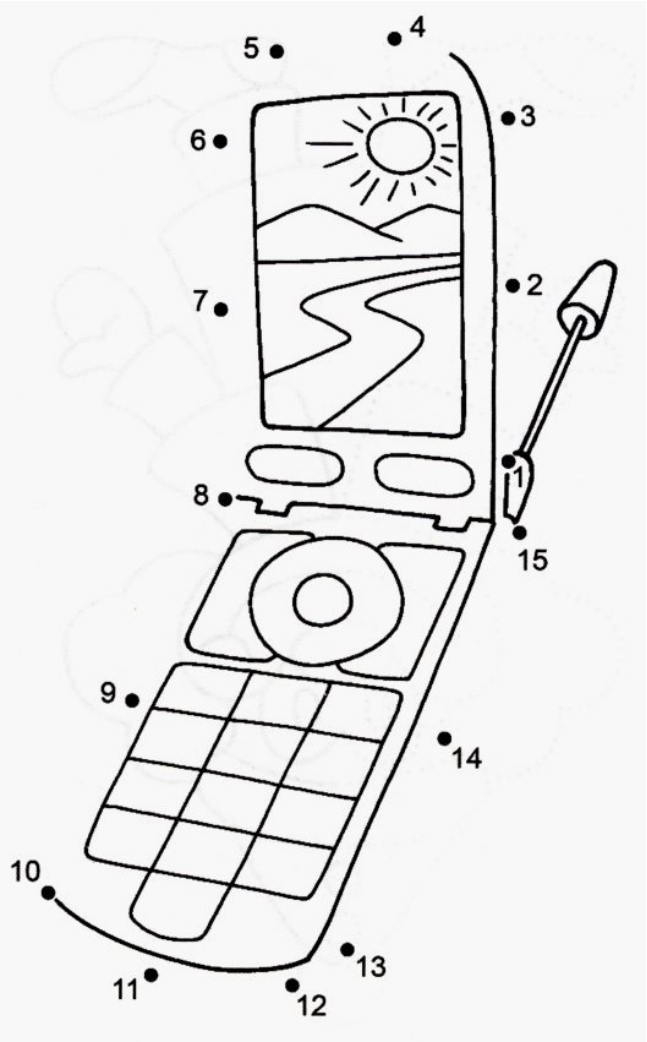

Use a **RED** crayon and color only the boxes below with an A in them.

M	M	M	M	M	M	M	M	M	M	M	M	M
M	A	A	A	A	A	M	M	A	M	M	A	M
M	A	M	M	M	A	M	M	A	M	M	A	M
M	A	M	M	M	A	M	M	A	M	M	A	M
M	A	M	M	M	A	M	M	A	M	M	A	M
M	A	A	A	A	A	M	M	A	M	M	A	M
M	M	M	M	M	A	M	M	A	M	M	A	M
M	M	M	M	M	A	M	M	A	M	M	A	M
M	M	M	M	M	A	M	M	A	M	M	A	M
M	A	A	A	A	A	M	M	A	M	M	A	M
M	M	M	M	M	M	M	M	M	M	M	M	M

Provided by the SD Department of Public Safety and the 9-1-1 Coordination Board

118 West Capitol, Pierre, SD 57501 – (605) 773-3178